Fault Tolerant Flight Control using a modular approach

Control and Simulation division

Introduction

Especially in civil aviation, all developments focus on the improvement of safety levels and reducing the risks that critical failures occur. Over the past 20 years, 17% of all aircraft accident cases is attributed to "loss of control in flight" to some extent.

With the technology and computing power available on this moment, it might have been possible to recover a significant share of this percentage on the condition that non-conventional control strategies would have been available. This involves the concept of fault tolerant flight control (FTFC), where the control system is capable to detect changes in the aircraft behaviour and to adapt itself so that it can handle the perturbed aircraft dynamics.

This research focuses on a modular approach, based on on-line identifying physical models of damaged aircraft and adaptive nonlinear dynamic inversion (ANDI). This improves intelligibility of the results.

This research is part of a European research initiative in the Garteur framework (Group for Aeronautic Research and Technology in Europe), involving several academic and industrial partners.

Identifying damaged aircraft model

The damaged aircraft model is identified with the *two step method* (TSM). This method involves first an aircraft state estimation (ASE) step, followed by an aerodynamic model identification (AMI) step. It is important to take into account not only changing aerodynamic properties for component failures, but also varying mass properties and couplings as a consequence of possible in-flight structural damage.

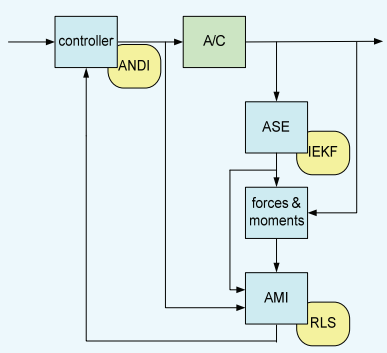

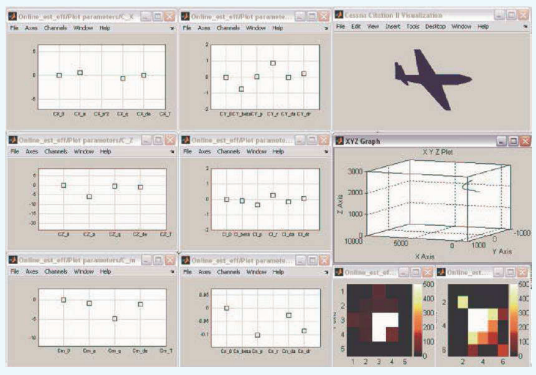

Adaptive Nonlinear Dynamic Inversion

Using this model based indirect control method, it is possible to exploit the knowledge of the up-to-date mathematical model and to reconfigure the crippled aircraft. ANDI allows manual control (single loop) as well as autopilot waypoint guidance (multi loop).

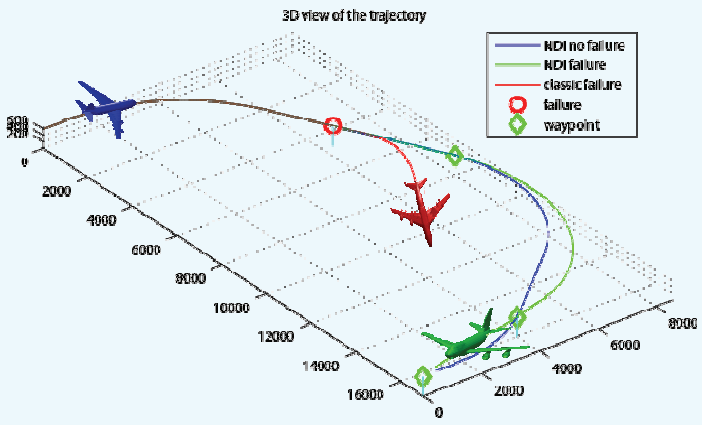

Evaluation on SIMONA

This FTFC setup has been evaluated by experienced pilots in the SIMONA Research Simulator for different failure scenarios, including El Al Flight 1862 which crashed on the Bijlmermeer.

SIMONA outside

SIMONA cockpit

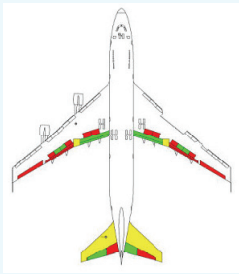

Flight 1862 damage

Results and future work

Results have shown that the combination of TSM and ANDI is successful in reconfiguring crippled aircraft suffering from faulty control surfaces as well as the more challenging structural failures.

Future work involves further development of the TSM to include robustness for even more significant mass property changes and extensions to the ANDI algorithm with alternative forms of control allocation.

Contacts and credits

Ir. T.J.J. Lombaerts	t.j.j.lombaerts@tudelft.nl	Dr. Q. P. Chu	q.p.chu@tudelft.nl
Ir. O. Stroosma	o.stroosma@tudelft.nl	Prof. Dr. Ir. J. A. Mulder	j.a.mulder@tudelft.nl
Ir. M.H. Smaili, NLR	Ir. J. H. Breeman, NLR	Ir. D.A. Joosten, DCSC	Dr. Ir. T.J.J. van den Boom, DCSC